SIYAM SINCE 1992

RADIATOR

SIYAM SINCE 1992 RADIATOR

WELCOME TO SIYAM RADIATOR

ABOUT US

Founded in 1992, Siyam Radiator, is specialized in developing and manufacturing OE, customized, and aftermarket, core and complete cooling products.

We offer a wide range of copper and aluminum radiators, intercoolers, and condensers for passenger vehicles, trucks, tractors, heavy-duty equipment, Generators, Gen-sets.

We have distinguished ourselves by providing high quality products, with superior services, delivered on-time and at a competitive price. We are **ISO 9001:2015** certified.

GROWTH & MARKET

30 Years

+30 EXPERIENCE YEARS

+500 EMPLOYEES

+2000 MODELS

5 MANUFACTURING FACILITIES

1 MILLION

1 MILLION SQF OPERATION

MADE IN JORDAN

OUR CAPABILITIES

5S PRODUCTION LINES

FULLY AUTOMATIC MACHINERY

ERP OPERATED - SAP

ATEQ LEAK TESTING MACHINERY

OUR CAPABILITIES

SCHOLER TUBE MILL

MATRIX CORE BUILDING

Capacity

- Automotive ~55 sec/1 radiator
- Truck ~ 3 minutes / 1 radiator

OUR CAPABILITIES

ROBOTIC WELDING

ERROR PROOFING PRODUCTION

BOLT-ON PRODUCTION

BRAZING FURNACES

OUR CAPABILITIES

TOOLROOM / CNC

PRESS SHOPS

OUR CAPABILITIES

SAHAJ RADIATOR SINCE 1982

& MUCHMORE!

R&D DEPARTMENT

20 EXPERIENCED ENGINEERS WORKING IN OUR R&D DEPARTMENT

- COOLING EFFICIENCY TESTING
- R&D
- DESIGNING CAPILITY/REVERSE ENGINEERING
- TECHNICAL DRAWINGS AND DEVELOPMENT

PRODUCT DEVELOPMENT

All parts goes through our engineering to ensure that products meets or exceeds OEM standards and specifications

- Reverse engineering and product enhancements.
- In-house design, development, and prototyping.
- Product fabrication feasibility.
- Process & material optimization.
- CNC programming.
- 3D scanning – Creaform USA.

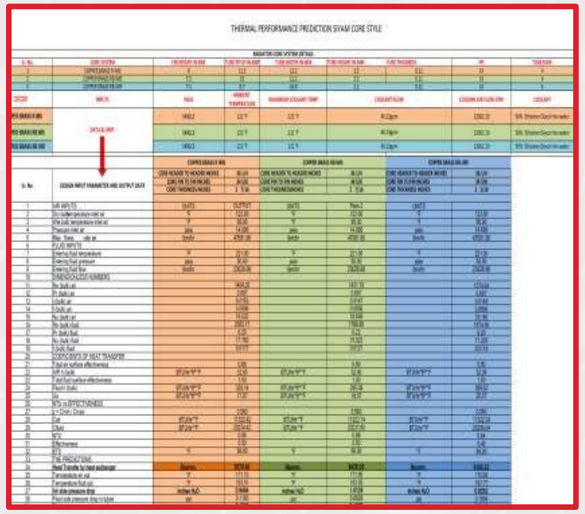

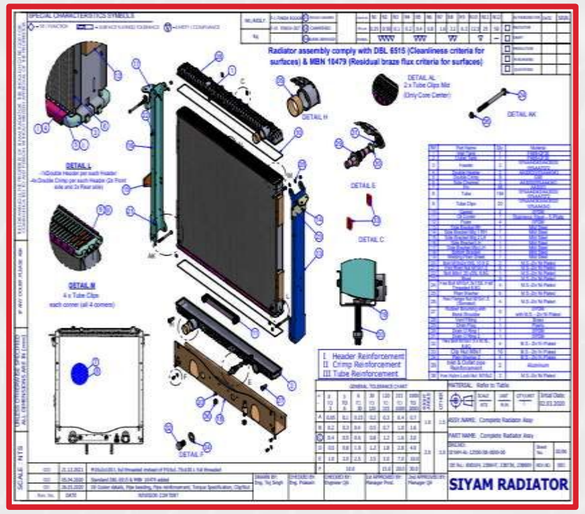

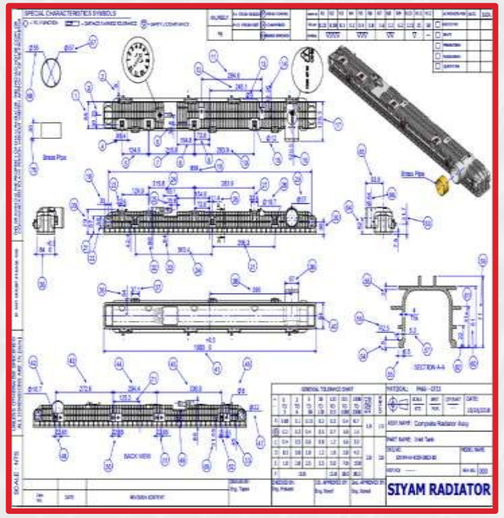

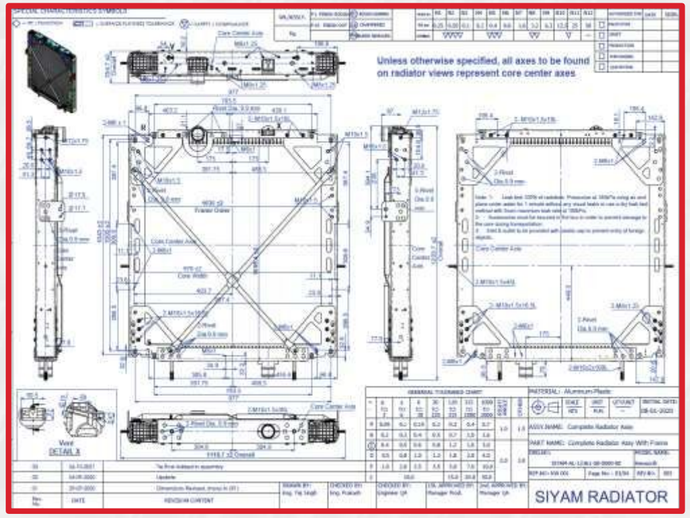

TESTING & VALIDATION

All our products are thoroughly tested at our world class-testing laboratory and lab partners in Europe. Our labs has all the facilities needed for testing quality, functionality, and durability.

- World-Class Laboratory Testing.
- Complete Pressure Cycle Testing.
- OEM Standards Validation.
- Performance Product Testing.

OUR KEY TO SUCCESS

- **Pristine Quality**: Industry-leading Total Quality Management ensures excellence in every unit.
- **Guaranteed Reliability**: 100% tested products for durability and optimal performance.
- **Precision Engineering**: Full dimensional and fitment control for seamless integration.
- **Comprehensive Quality Control**: Every production line is guided by detailed control and process charts to ensure consistency and precision.
- **Final Quality Checks**: Each shipment undergoes rigorous Final Quality Control (FQC) inspections to guarantee top-tier standards.
- **Globally Certified Excellence**: Our products meet international **ISO** certification requirements, ensuring reliability and trust.

LRQA

Certificate of Approval

This is to certify that the Management System of:

Besan Co. for Manufacturing of Car Spare Parts

BESAN Company for Manufacturing & Cars Spare Parts Member of Ibrahim Siyam Industrial Group
2nd King Abdallah Industrial City, Building Number 312, Sahab, Jordan

has been approved by LRQA to the following standards:

ISO 9001:2015

Approval number(s): ISO 9001 – 0046782-002

This certificate forms part of the approval identified by approval number: 0046782

The scope of this approval is applicable to:

Manufacture of Complete Radiators and Radiator Cores, for Cars, Trucks and Heavy Equipment & Generators

Luis Cunha

Area Operations Manager - North Asia & MANEA

Issued by: LRQA Limited

RAW MATERIAL

- Our Quality Policy ensures that the best raw material is used.
- We evaluate suppliers and ensure they meet the international standards as well as our industrial group technical specifications

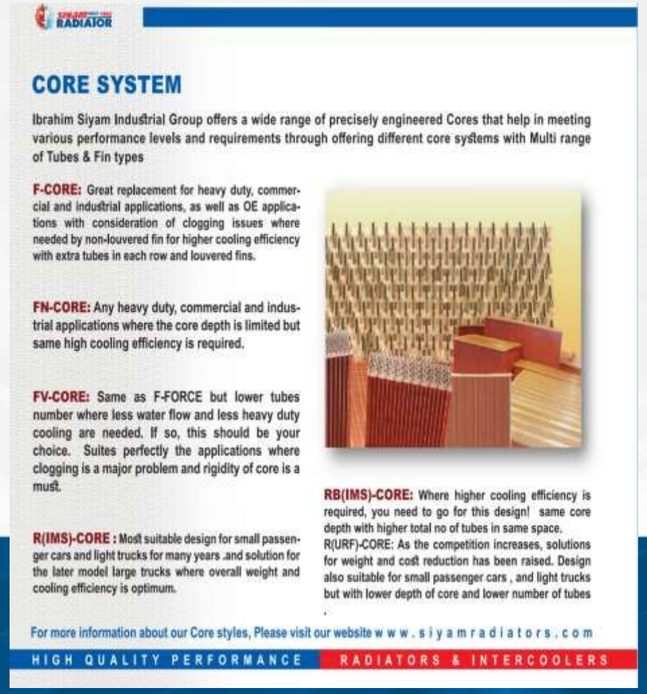

SIYAM RADIATOR

CORE SYSTEM

Ibrahim Siyam Industrial Group offers a wide range of precisely engineered Cores that help in meeting various performance levels and requirements through offering different core systems with Multi range of Tubes & Fin types

F-CORE: Great replacement for heavy duty, commercial and industrial applications, as well as OE applications with consideration of clogging issues where needed by non-louvered fin for higher cooling efficiency with extra tubes in each row and louvered fins.

FN-CORE: Any heavy duty, commercial and industrial applications where the core depth is limited but same high cooling efficiency is required.

FV-CORE: Same as F-FORCE but lower tubes number where less water flow and less heavy duty cooling are needed. If so, this should be your choice. Suites perfectly the applications where clogging is a major problem and rigidity of core is a must.

R(IMS)-CORE : Most suitable design for small passenger cars and light trucks for many years .and solution for the later model large trucks where overall weight and cooling efficiency is optimum.

RB(IMS)-CORE: Where higher cooling efficiency is required, you need to go for this design! same core depth with higher total no of tubes in same space.
R(URF)-CORE: As the competition increases, solutions for weight and cost reduction has been raised. Design also suitable for small passenger cars , and light trucks but with lower depth of core and lower number of tubes
.

For more information about our Core styles, Please visit our website w w w . s i y a m r a d i a t o r s . c o m

HIGH QUALITY PERFORMANCE | RADIATORS & INTERCOOLERS

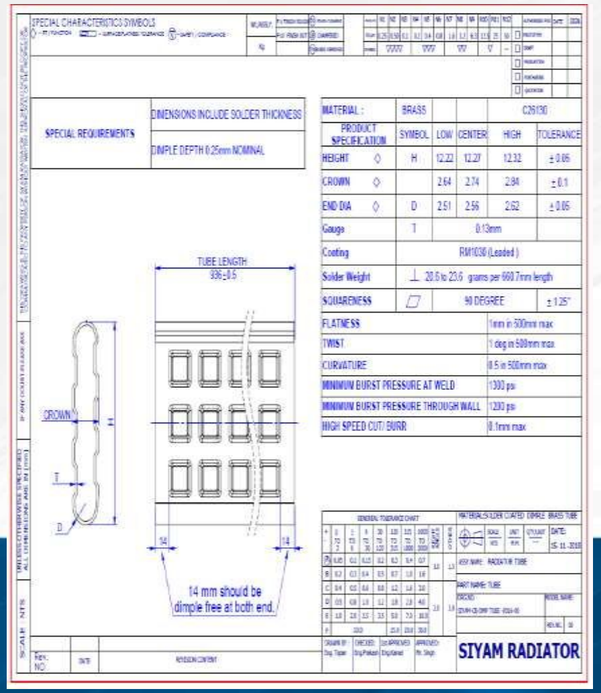

SPECIAL REQUIREMENTS: DIMENSIONS INCLUDE SOLDER THICKNESS; DIMPLE DEPTH 0.25mm NOMINAL

MATERIAL :	BRASS			C26130	
PRODUCT SPECIFICATION	SYMBOL	LOW	CENTER	HIGH	TOLERANCE
HEIGHT ◇	H	12.22	12.27	12.32	± 0.05
CROWN ◇		2.64	2.74	2.84	± 0.1
END DIA ◇	D	2.51	2.56	2.62	± 0.05
Gauge	T	0.13mm			
Coating	RM1036 (Leaded)				
Solder Weight	⊥ 20.6 to 23.6 grams per 660.7mm length				
SQUARENESS	▱	90 DEGREE			± 1.25°
FLATNESS	1mm in 500mm max				
TWIST	1 deg in 500mm max				
CURVATURE	0.5 in 500mm max				
MINIMUM BURST PRESSURE AT WELD	1300 psi				
MINIMUM BURST PRESSURE THROUGH WALL	1200 psi				
HIGH SPEED CUT/ BURR	0.1mm max				

TUBE LENGTH 936±0.5

CROWN

14 mm should be dimple free at both end.

SIYAM RADIATOR

SIYAM PRODUCT RANGE

RADIATORS – INTERCOOLERS – PARTS

AUTOMOTIVE

TRUCKS

AGRICULTURAL

HEAVY DUTY

GENERATORS

PREMIUM PRODUCT PACKAGING

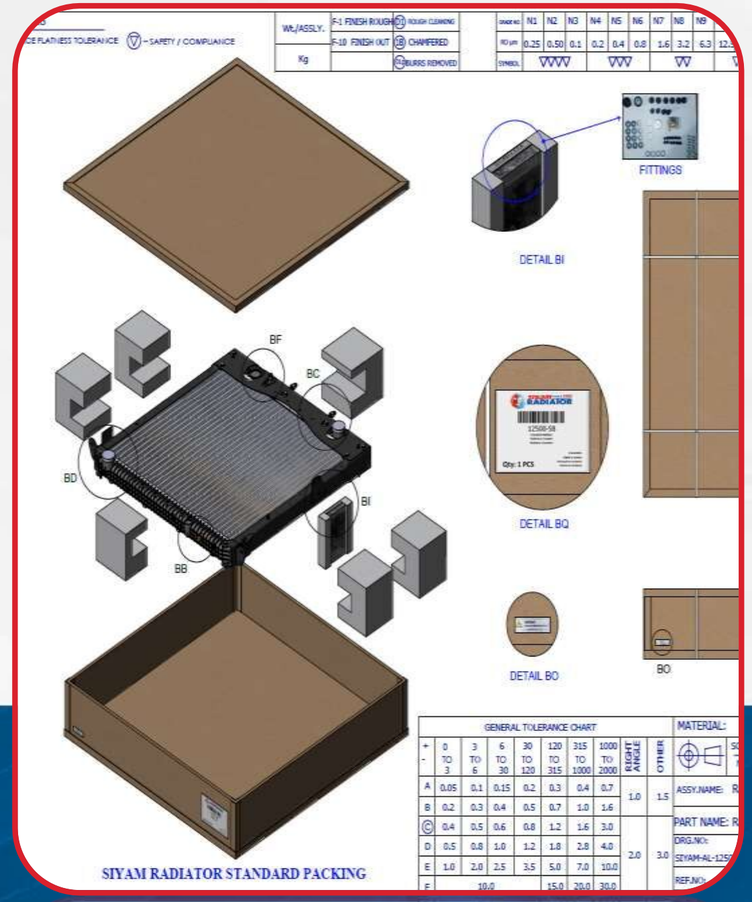

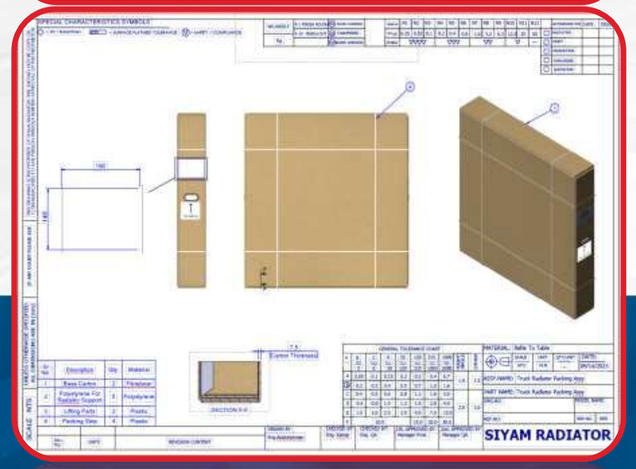

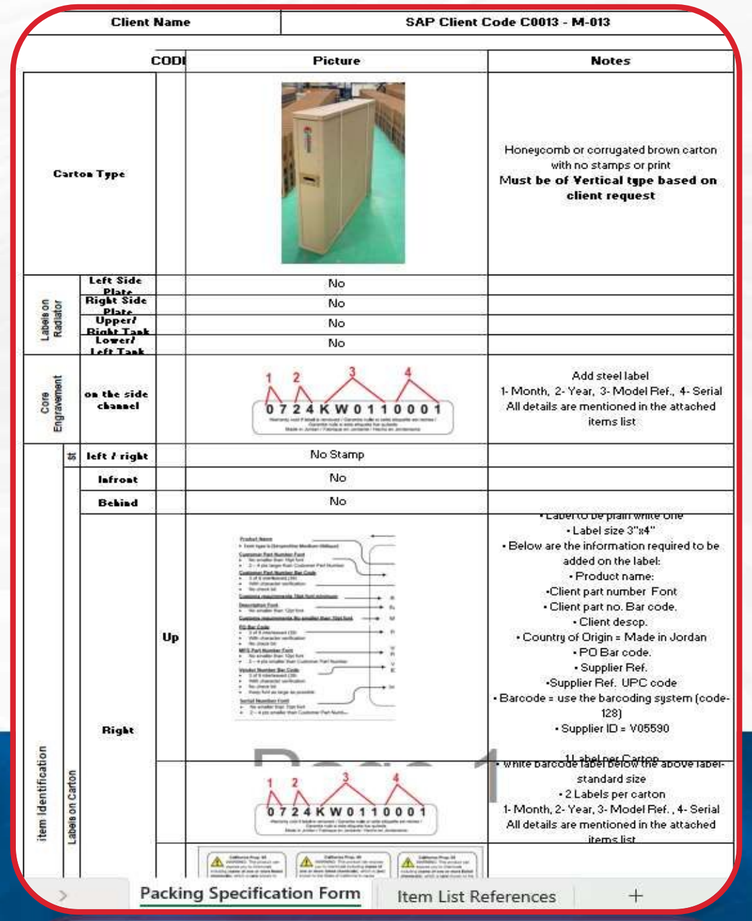

Client Name	SAP Client Code C0013 - M-013

		CODI	Picture	Notes
Carton Type				Honeycomb or corrugated brown carton with no stamps or print **Must be of Vertical type based on client request**
Labels on Radiator	Left Side Plate		No	
	Right Side Plate		No	
	Upper/ Right Tank		No	
	Lower/ Left Tank		No	
Core Engravement	on the side channel		1 2 3 4 0 7 2 4 K W 0 1 1 0 0 0 1	Add steel label 1- Month, 2- Year, 3- Model Ref., 4- Serial All details are mentioned in the attached items list
item Identification	8t	left / right	No Stamp	
		Infront	No	
		Behind	No	
	Labels on Carton	Up		• Label to be plain white one • Label size 3"x4" • Below are the information required to be added on the label: • Product name: •Client part number Font • Client part no. Bar code. • Client descp. • Country of Origin = Made in Jordan • PO Bar code. • Supplier Ref. •Supplier Ref. UPC code • Barcode = use the barcoding system (code-128) • Supplier ID = V05590
		Right	1 2 3 4 0 7 2 4 K W 0 1 1 0 0 0 1	• White barcode label below the above label: standard size • 2 Labels per carton 1- Month, 2- Year, 3- Model Ref. , 4- Serial All details are mentioned in the attached items list

Packing Specification Form | Item List References

ENGINEERED PACKAGING FOR EACH PRODUCT

DESIGNED FOR EVERY MARKET,BUILT FOR EVERY DRIVE

Our solutions are cooling engines globally in over 25 countries.

SIYAM GLOBAL FOOTPRINT

LAS VEGAS

FRANKFURT

AFRICA

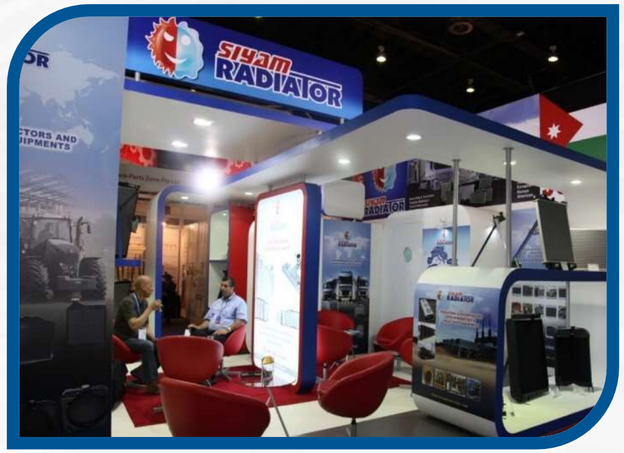

SAUDI ARABIA

MENA

THANK YOU

SIYAM SINCE 1992
RADIATOR